serviplus

área de servicio postventa mabe

CATALOGO DE REFACCIONES
SPARE PARTS LIST

CENTRO DE LAVADO A GAS.
GAS LAUNDRY CENTER.

mabe

Modelo:

LCMP77104BAB01

(127 V - 60 Hz)

N° de Publicación

PC-CELA-012-0319

TAPA Y CONTROLES / LID AND CONTROLS

LCMP77104BAB01

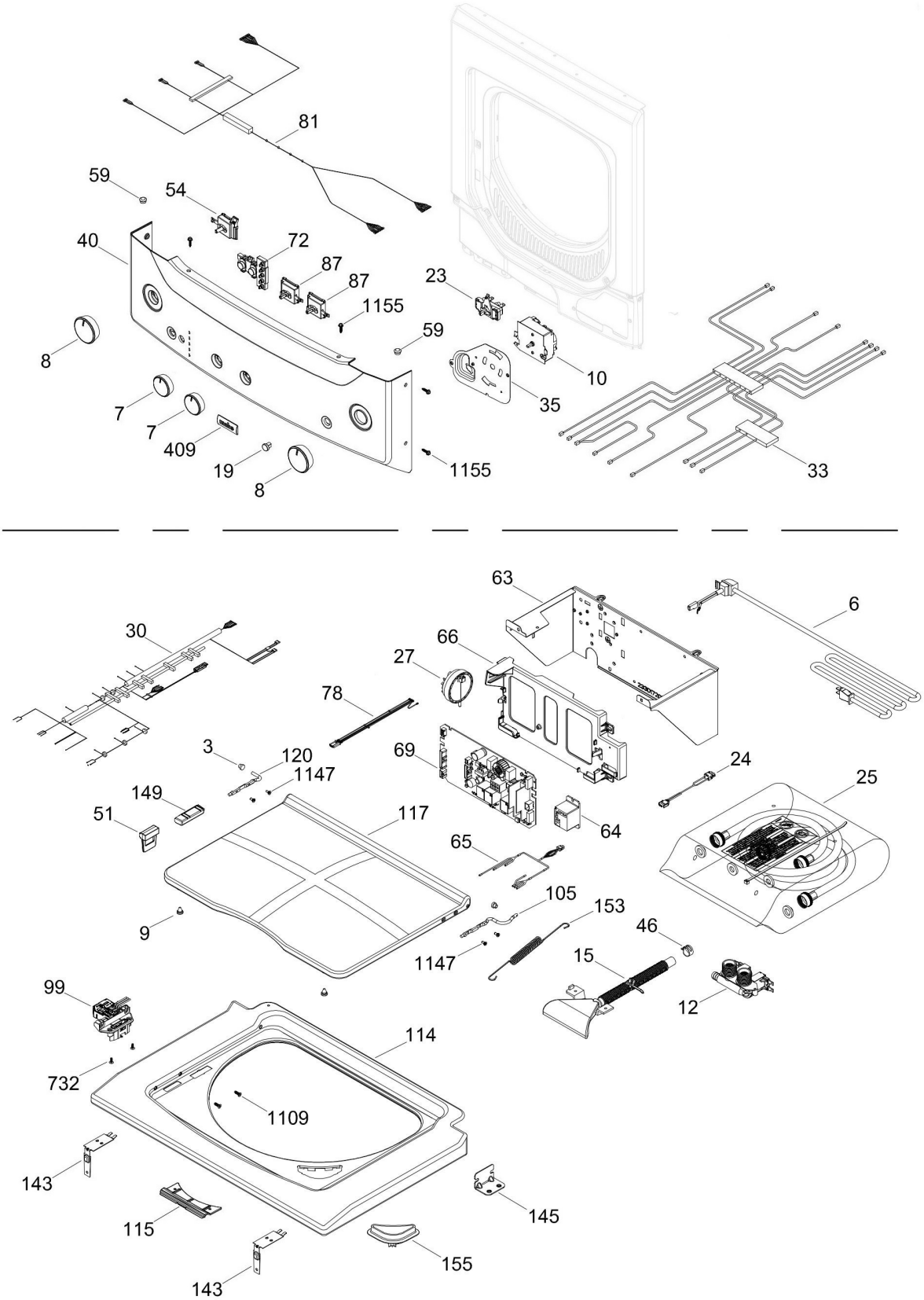

PUERTA SECADORA / DOOR DRYER

LCMP77104BAB01

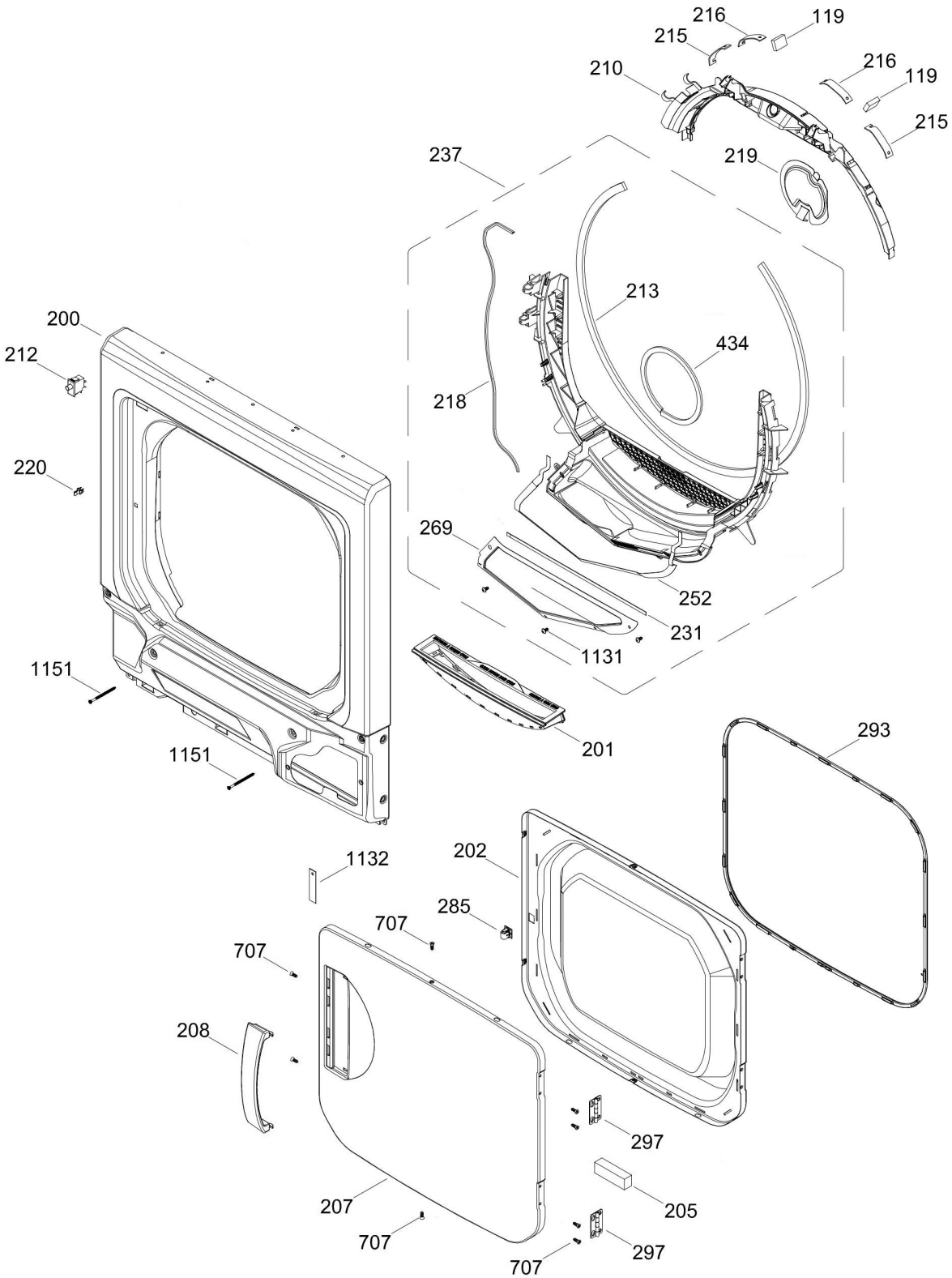

GABINETE Y TAMBOR SECADORA /CABINET & DRUM DRYER

LCMP77104BAB01

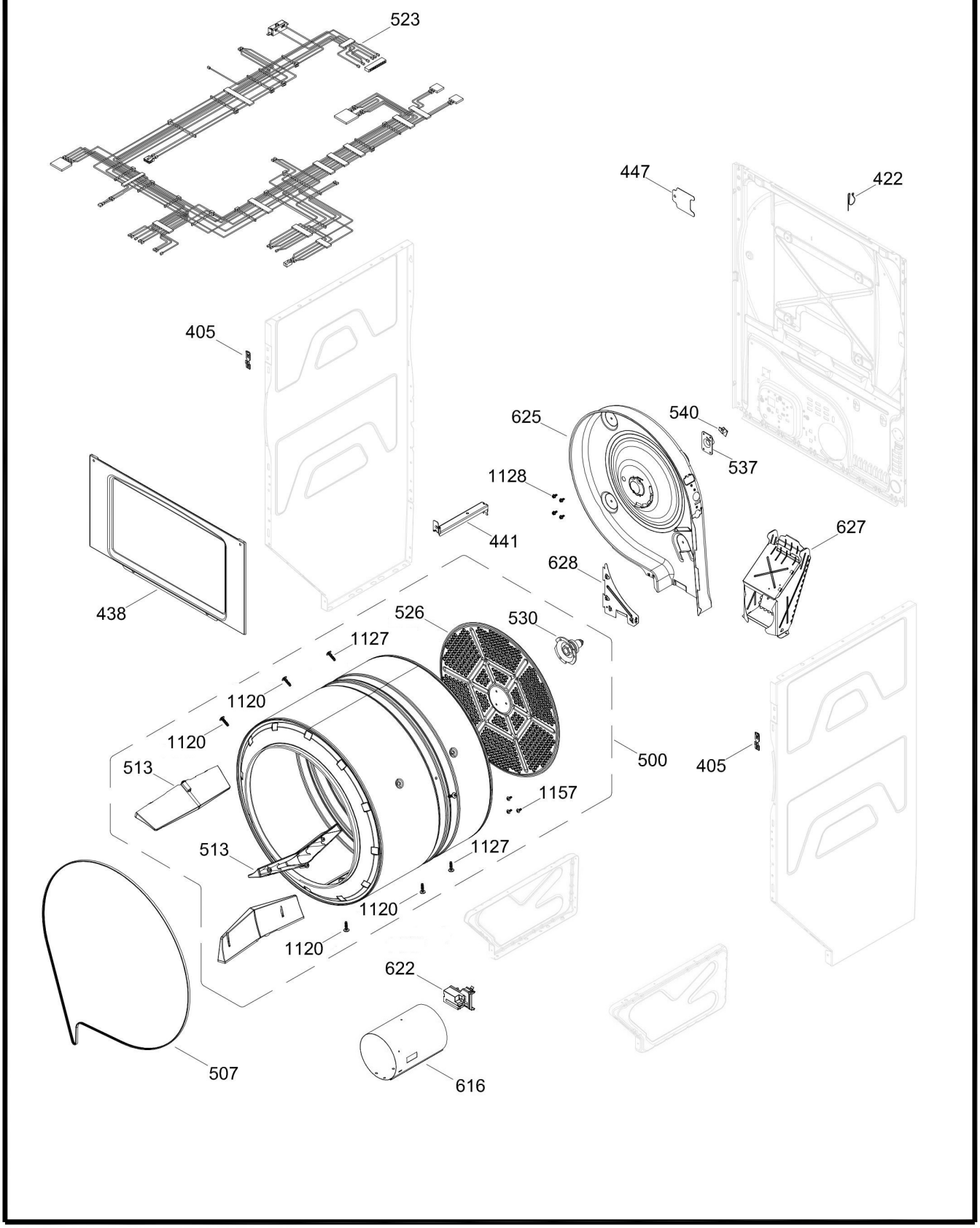

SISTEMA DE TRANSMISION SEC / BLOWER & DRIVE ASSEMBLY DRYER

LCMP77104BAB01

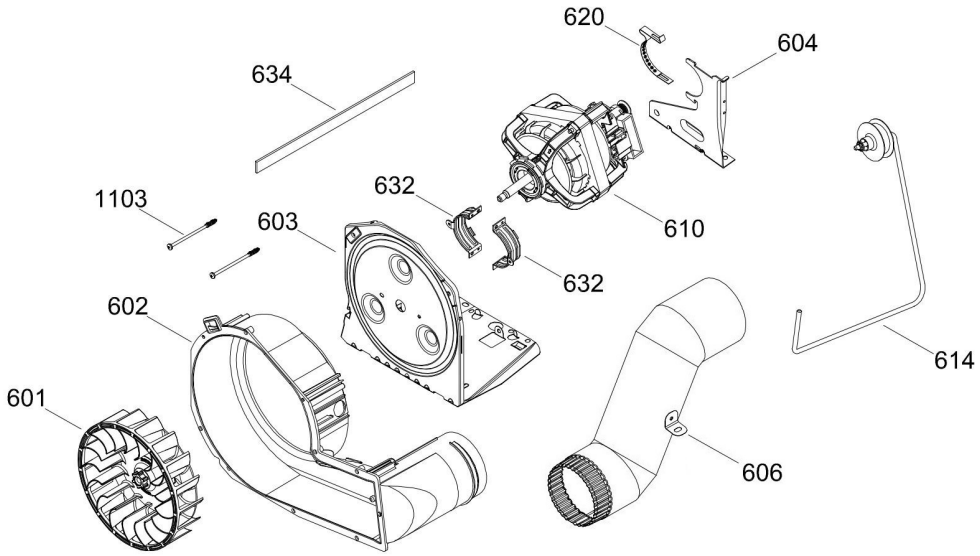

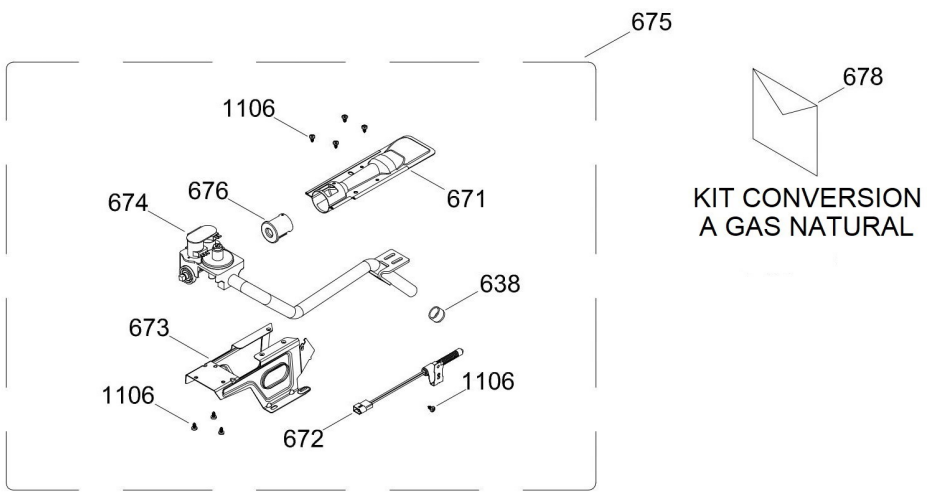

GABINETE LAV / WASHER CABINET

LCMP77104BAB01

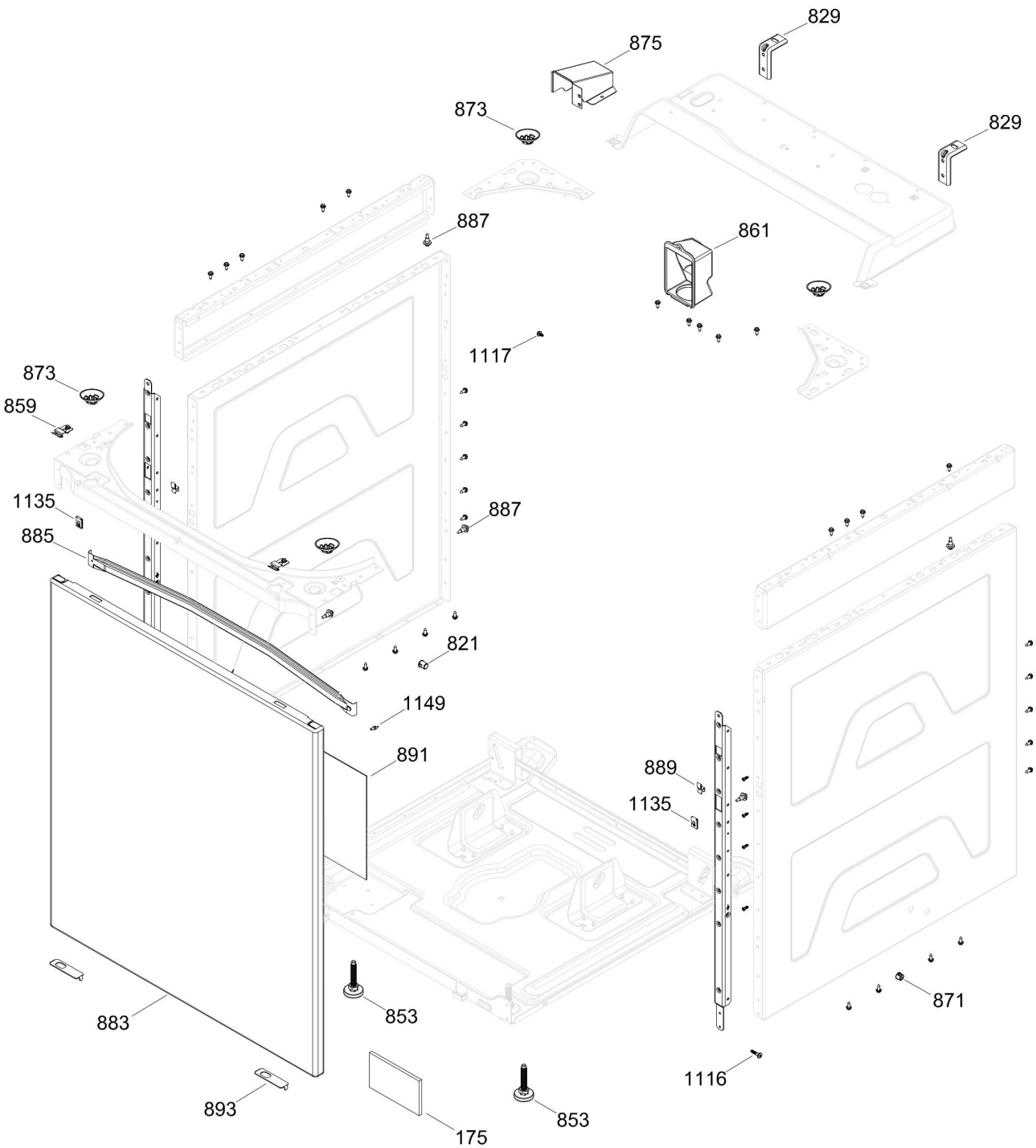

TINA LAVADORA / TUB WASHER

LCMP77104BAB01

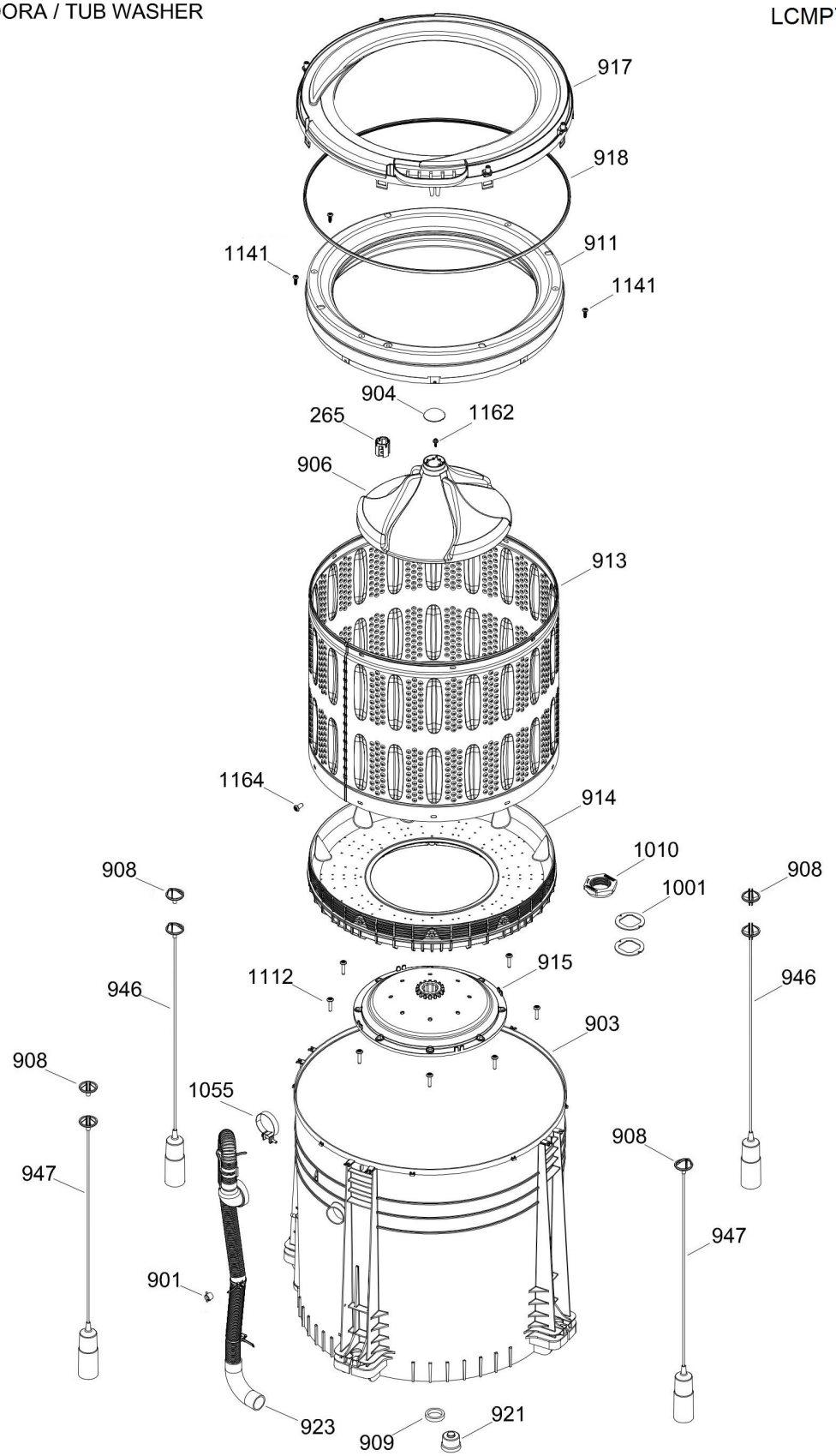

SISTEMA MOTRIZ LAV / DRIVE COMPONENTS WASHER
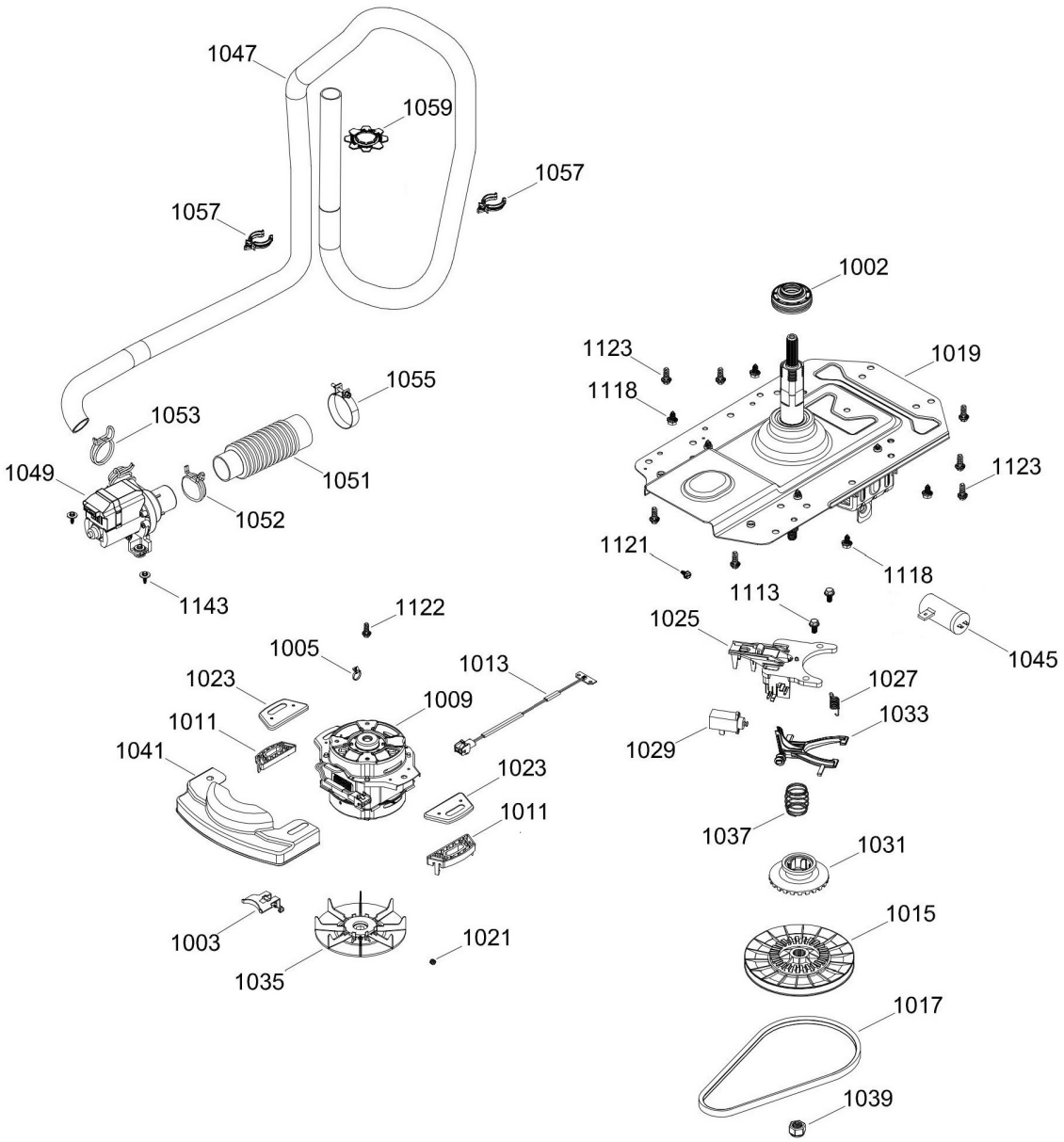
LCMP77104BAB01